ATD-SYSTEM

PRESSURE GAS SYSTEM CARDOX®

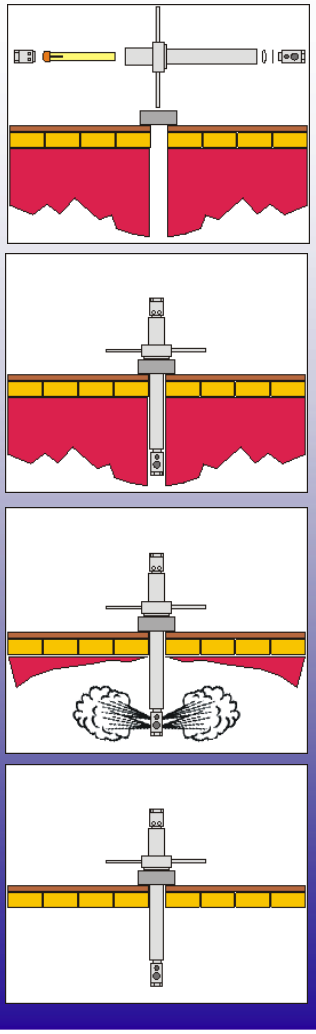

Load it up.
Lock it in.
Blow it away!

ATD-Abbausysteme GmbH
Premium Products

How it is working

Load it up!

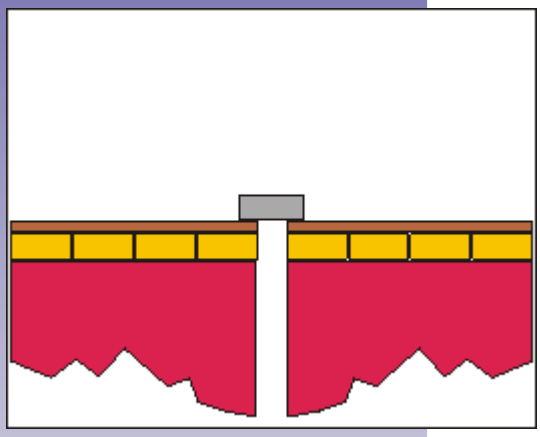

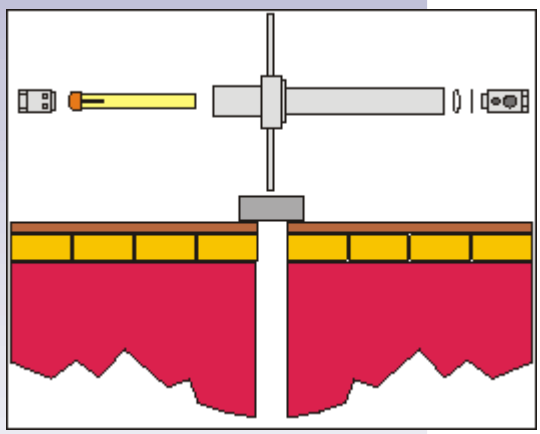

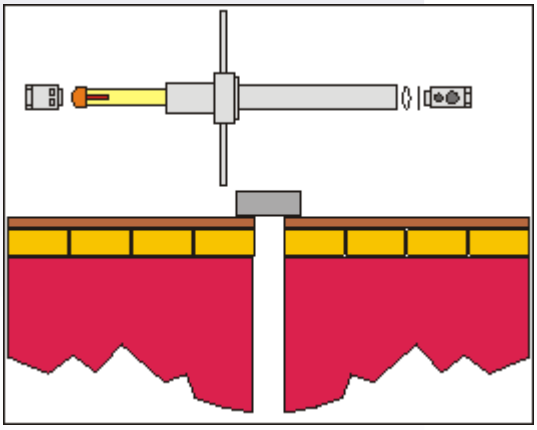

Lock it in!

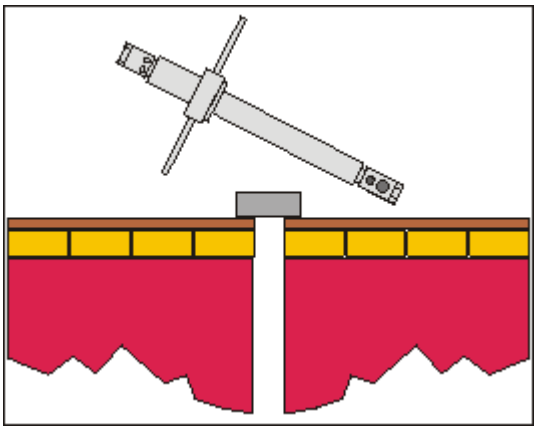

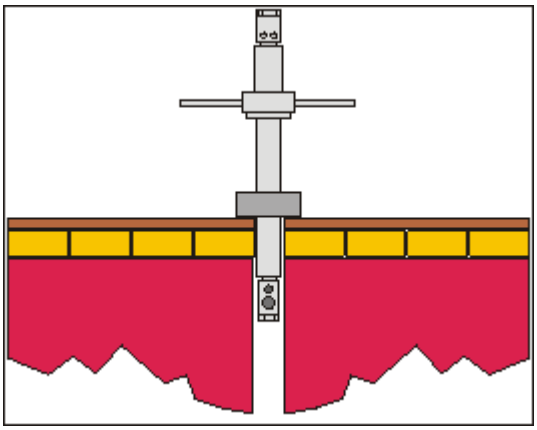

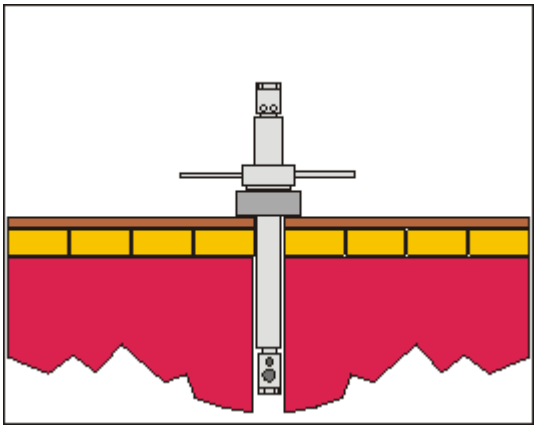

Inside the ATD-Pressure Gas Tube, the pressure of the CO2 charge gets consequent increased by activating the ATD-Pressure Gas Generator. At a very pre-determined level, the Shear Disc blows and the released CO2-gas is directed by the Discharge Head exactly where required.

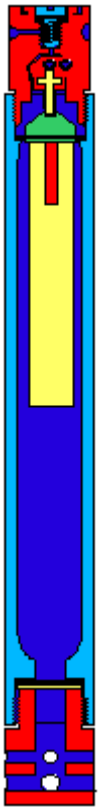

Blow it away!

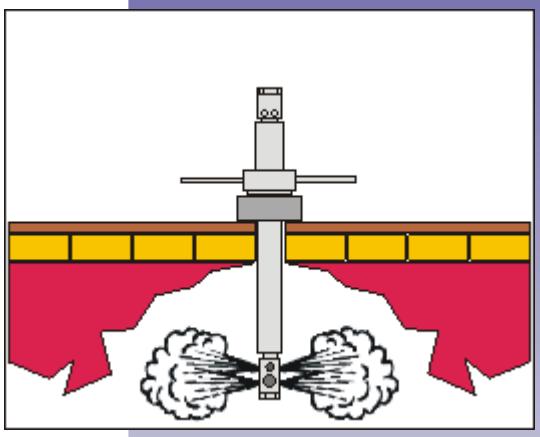

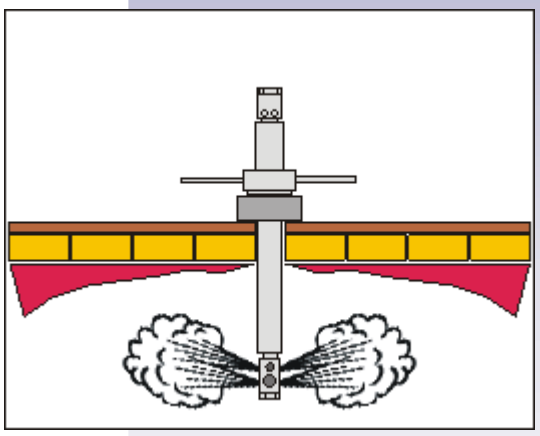

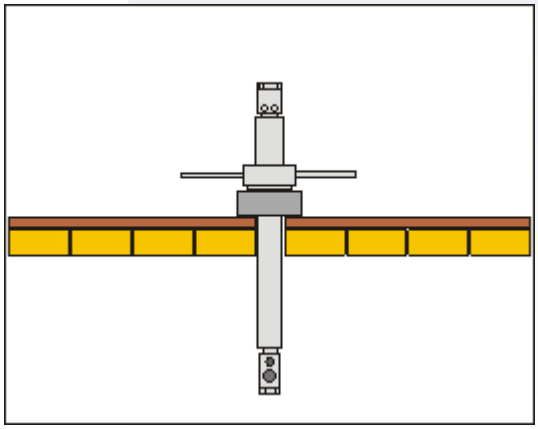

ATD-Pressure Gas System CARDOX®

How its been used

The ATD-Pressure Gas Tube is been used directly where the build-up occurs. As the entry to the obstruction, ATD-Base sockets are installed i.e. on the steel shell of the plant. Through the insertion hole, the ATD-Pressure Gas Tube will be inserted into the build-up with the Discharge Head in safe distance behind the refractory. Locked with the ATD-Gripcase to the ATD-Base, the ATD-Tube is breaking up the deposits by the strong release of its CO2-charge.

ATD-Pressure Gas Tube
locked i.e. to the rotary kiln.

ATD-
Lockings

ATD-Base Socket

ATD-Gripcase
standard type

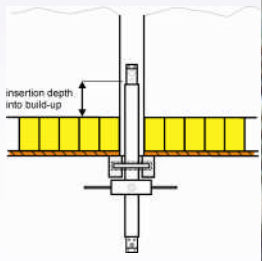

insertion
principle

ATD-Abbausysteme GmbH
Karolinenstr. 18
44379 Dortmund
Germany

Phone: +49 (0)231 96 78 66-0
Fax: +49 (0)231 9678 66-29
Email: info@atd-cardox.de

Misapprehension and subject to change without prior notice