THE INFORMATION AND DESIGN HEREIN WAS ORIGINATED BY AND IS THE PROPERTY OF SKYLOCK INDUSTRIES INCORPORATED. SKYLOCK INDUSTRIES INCORPORATED RESERVES ALL PATENT, PROPRIETARY, DESIGN MANUFACTURING, REPRODUCTION, USE AND SALES RIGHTS THERETO, AND TO ANY ARTICLE DISCLOSED THEREIN EXCEPT TO THE EXTENT RIGHTS ARE EXPRESSLY GRANTED TO OTHERS. THE FOREGOING DOES NOT APPLY TO VENDOR PROPRIETARY PARTS.

REVISIONS

ZONE	LTR	DESCRIPTION	DATE	APPROVED
	P1	PRELIMINARY RELEASE	11-1-96	T. CSIK

NOTES: UNLESS OTHERWISE SPECIFIED.

1. MAT'L: LOCK CYLINDER AND BOLT; BRASS,
   ALL OTHER COMP'S: 300 SERIES CRES.
2. FINISH: BRASS; SATIN CHROME, CRES.; PASSIVATE.
3. DECORATIVE FINISH: SATIN BUFF TOP OF CASE AND HANDLE.
4. NOMINAL LOAD POINT IS .250" FROM TIP OF BOLT.
   STATIC LOAD IS 200 LBS. MAX. AT NOMINAL LOAD POINT.
5. MOUNTING HOLE PATTERN SAME FOR ODD AND EVEN DASH NUMBERS.
6. BOLT IS SPRING LOADED TO THE EXTENDED POSITION. KEYING IS T4619, AND MAY BE REMOVED IN EITHER LOCKED OR UNLOCKED POSITION.

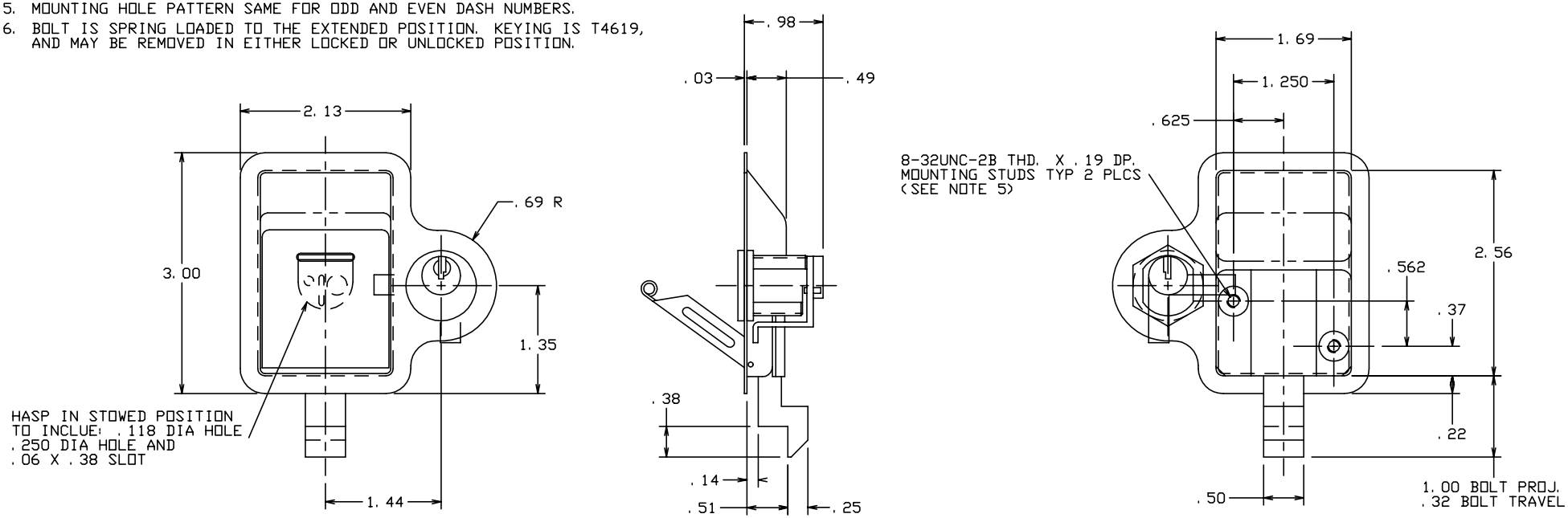

-1 LATCH ASSY (SHOWN)
-2 LATCH ASSY (OPP.)

DASH NO.	DESCRIPTION	
-2	LATCH ASSY	(OPP., NO FLAP FLAP SPRING)
-1	LATCH ASSY	(SHOWN, NO FLAP SPRING)

PARTS LIST

UNLESS OHERWISE SPECIFIED
DIMENSIONS ARE IN INCHES
TOLERANCES ON
DECIMALS .X ± .1 .XX ± .03 .XXX ± .010
ANGLES ± 0° 30'
DRILLED HOLES AND 10387

DO NOT SCALE THIS DRAWING

MATERIAL - FINISH

NEXT ASSY

FINAL ASSY

DRAWN BY T. CSIK 11-1-96
CHECKED
ENGINEER
PROJECT
APPROVAL T. CSIK 11-1-96
APPROVAL
USED ON

SKYLOCK INDUSTRIES INCORPORATED
MONROVIA CALIFORNIA U.S.A.

LATCH ASSEMBLY-LOCKING

SIZE	CODE IDENT. NO.	DRAWING NO.	REV.
C	51941	20926	P1

SCALE 1:1 WT. SHEET 1 OF 1