THE INFORMATION AND DESIGN HEREIN WAS ORIGINATED BY AND IS THE PROPERTY OF SKYLOCK INDUSTRIES INCORPORATED. SKYLOCK INDUSTRIES INCORPORATED RESERVES ALL PATENT, PROPRIETARY, DESIGN MANUFACTURING, REPRODUCTION, USE AND SALES RIGHTS THERETO, AND TO ANY ARTICLE DISCLOSED THEREIN EXCEPT TO THE EXTENT RIGHTS ARE EXPRESSLY GRANTED TO OTHERS. THE FOREGOING DOES NOT APPLY TO VENDOR PROPRIETARY PARTS.

REVISIONS				
ZONE	LTR	DESCRIPTION	DATE	APPROVED
	NC	PRODUCTION RELEASE	8-27-91	T.C.

NOTES: UNLESS OTHERWISE SPECIFIED.

1. REMOVE ALL BURRS AND BREAK SHARP EDGES.
2. MAT'L: ALL COMP'S. ST. STL.
3. OPERATION: LIFT HANDLE APPROX. 55° TO RETRACT BOLT. BOLT IS SPRING LOADED AND ALWAYS FREE TO LATCH.
4. STATIC LOAD: 800 LBS.

5 HASP LAYS FLAT UNDER HANDLE WHEN NOT IN USE.

6 HANDLE SPRING-LOADED OUT (-2):
HANDLE WILL NOT RETURN FLUSH WITH CASE IF BOLT IS NOT FULLY PROJECTED. SAFETY INDICATOR.

HANDLE SPRING-LOADED IN (-4):
HANDLE WILL STAY FLUSH WITH CASE REGARDLESS OF BOLT POSITION.

HANDLE WITHOUT SPRING (-6):
HANDLE IS RETURNED FLUSH WITH CASE BY BOLT SPRING, PROVIDING THAT BOLT IS FULLY PROJECTED.

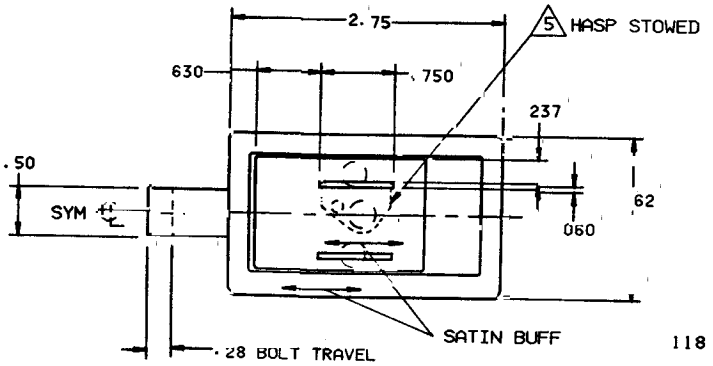

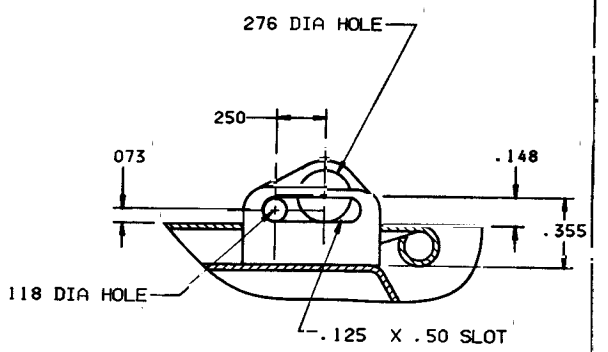

VIEW C
SCALE: 2/1

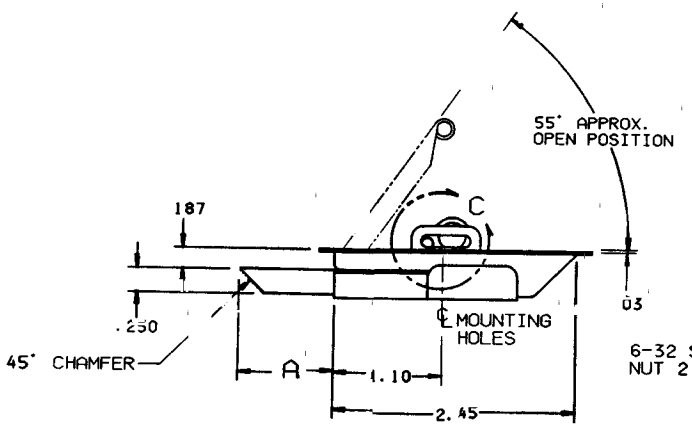

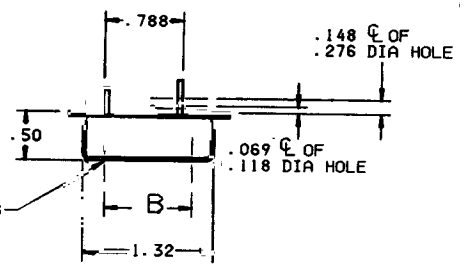

SECOND DASH NO.	A BOLT PROJECTION	B DIM
-19	.78	.826
-17	1.30	.826
-15	.82	.826
-13	.59	
-11	.37	.826 (21 MM)
-9	.78	.650
-7	1.30	.650
-5	.82	.650
-3	.59	.650
-1	.37	.650 (16.5 MM)

6 FIRST DASH NO.	HANDLE SPRING LOADED
-6	NONE
-4	IN
-2	OUT

QTY REQD	PART NO.	DESCRIPTION	MATERIAL SIZE SPECIFICATION	ITEM NO.
PARTS LIST				

UNLESS OTHERWISE SPECIFIED
DIMENSIONS ARE IN INCHES
TOLERANCES ON
DECIMALS .X ± .1, .XX ± .03, .XXX ± .010
ANGLES ± 0° 30'
DRILLED HOLES AND 10587

DO NOT SCALE THIS DRAWING
MATERIAL - FINISH
NEXT ASSY
FINAL ASSY

DRAWN BY T. CSIK 8-20-91
CHECKED
ENGINEER
PROJECT
APPROVAL T. CSIK 8-20-91
APPROVAL
USED ON

SKYLOCK INDUSTRIES INCORPORATED
MONROVIA CALIFORNIA U.S.A.

LATCH ASSY

SIZE	CODE IDENT. NO.	DRAWING NO.	REV.
C	51941	20726	NC

SCALE 1:1 & NOTED WT. SHEET 1 OF 1