THE INFORMATION AND DESIGN HEREIN WAS ORIGINATED BY AND IS THE PROPERTY OF SKYLOCK INDUSTRIES INCORPORATED. SKYLOCK INDUSTRIES INCORPORATED RESERVES ALL PATENT, PROPRIETARY, DESIGN MANUFACTURING, REPRODUCTION, USE AND SALES RIGHTS THERETO, AND TO ANY ARTICLE DISCLOSED THEREIN EXCEPT TO THE EXTENT RIGHTS ARE EXPRESSLY GRANTED TO OTHERS. THE FOREGOING DOES NOT APPLY TO VENDOR PROPRIETARY PARTS.

REVISIONS

ZONE	LTR	DESCRIPTION	DATE	APPROVED
	NC	PRODUCTION RELEASE	8-25-93	T. CSIK
	A	REVISED PAWL TO AGREE WITH CUST. DWG.	10-11-93	T. CSIK
	B	DIMENSIONALLY REVISED TO AGREE WITH CUST. DWG.	12-15-93	T. CSIK

NOTES: UNLESS OTHERWISE SPECIFIED.

1. REMOVE ALL BURRS AND BREAK SHARP EDGES.
2. MAT'L: KNOB; ALUM. ALLOY,
   ALL OTHER PARTS; CRES.
3. FINISH: ALUM.; ANODIZE, CRES PARTS; PASSIVATE.
4. DECORATIVE FINISH: KNOB; BRIGHT BUFF
   AND CANDY APPLE RED ANODIZE.
5. STATIC LOAD: 1200 LBS. MAX.

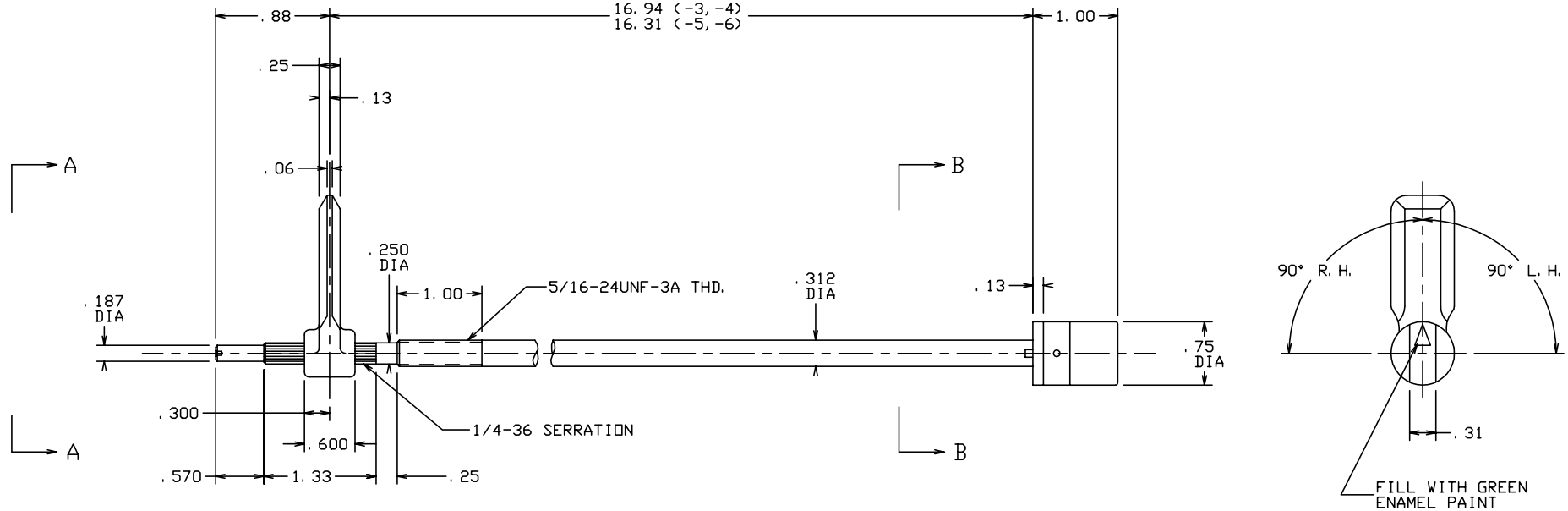

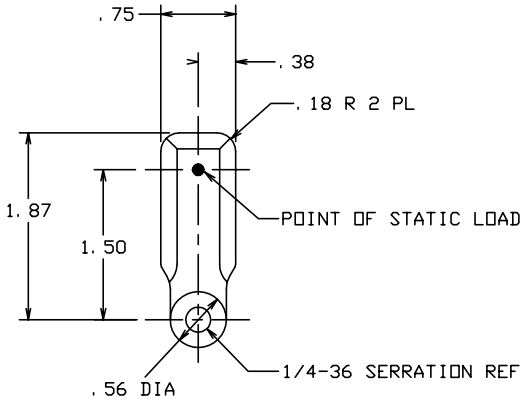

VIEW A-A

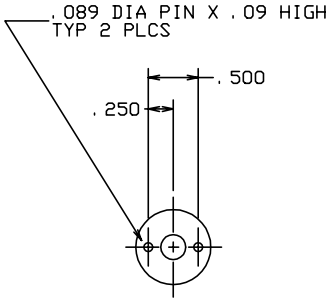

VIEW B-B

	-6	RETAINER ASSY	(90° RIGHT HAND, DETENTED AT EACH POSITION)	
	-5	RETAINER ASSY	(90° LEFT HAND, DETENTED AT EACH POSITION)	
	-4	RETAINER ASSY	(90° RIGHT HAND, DETENTED AT EACH POSITION)	
	-3	RETAINER ASSY	(90° LEFT HAND, DETENTED AT EACH POSITION)	
	PART NO.	DESCRIPTION	MATERIAL SIZE SPECIFICATION	ITEM NO.

PARTS LIST

UNLESS OHERWISE SPECIFIED
DIMENSIONS ARE IN INCHES
TOLERANCES ON
DECIMALS .X ± .1 .XX ± .03 .XXX ± .010
ANGLES ± 0° 30'
DRILLED HOLES AND 10387

DO NOT SCALE THIS DRAWING

MATERIAL - FINISH

NEXT ASSY

FINAL ASSY

DRAWN BY	T. CSIK	8-25-93
CHECKED		
ENGINEER		
PROJECT		
APPROVAL	T. CSIK	8-25-93
APPROVAL		
USED ON		

SKYLOCK INDUSTRIES INCORPORATED
MONROVIA CALIFORNIA U.S.A.

REMOTE RETAINER ASSY

SIZE	CODE IDENT. NO.	DRAWING NO.	REV.
C	51941	20853	B

SCALE 2:1 WT. SHEET 1 OF 1