THE INFORMATION AND DESIGN HEREIN WAS ORIGINATED BY AND IS THE PROPERTY OF SKYLOCK INDUSTRIES INCORPORATED. SKYLOCK INDUSTRIES INCORPORATED RESERVES ALL PATENT, PROPRIETARY, DESIGN MANUFACTURING, REPRODUCTION, USE AND SALES RIGHTS THERETO, AND TO ANY ARTICLE DISCLOSED THEREIN EXCEPT TO THE EXTENT RIGHTS ARE EXPRESSLY GRANTED TO OTHERS. THE FOREGOING DOES NOT APPLY TO VENDOR PROPRIETARY PARTS.

REVISIONS

ZONE	LTR	DESCRIPTION	DATE	APPROVED
	NC	PRODUCTION RELEASE	5-12-97	T. CSIK
	A	REVISED DIMS: IS 1.42 WAS 1.60, IS .71 WAS .53	3-30-98	T. CSIK

NOTES: UNLESS OTHERWISE SPECIFIED.
1. REMOVE ALL BURRS AND BREAK SHARP CORNERS.
2. MAT'L: 17-4PH CRES.
3. HEAT TREAT TO COND. H900 PER MIL-H-6875.
4. FINISH: PASSIVATE PER QQ-P-35, AND DRY FILM LUBRICATE.

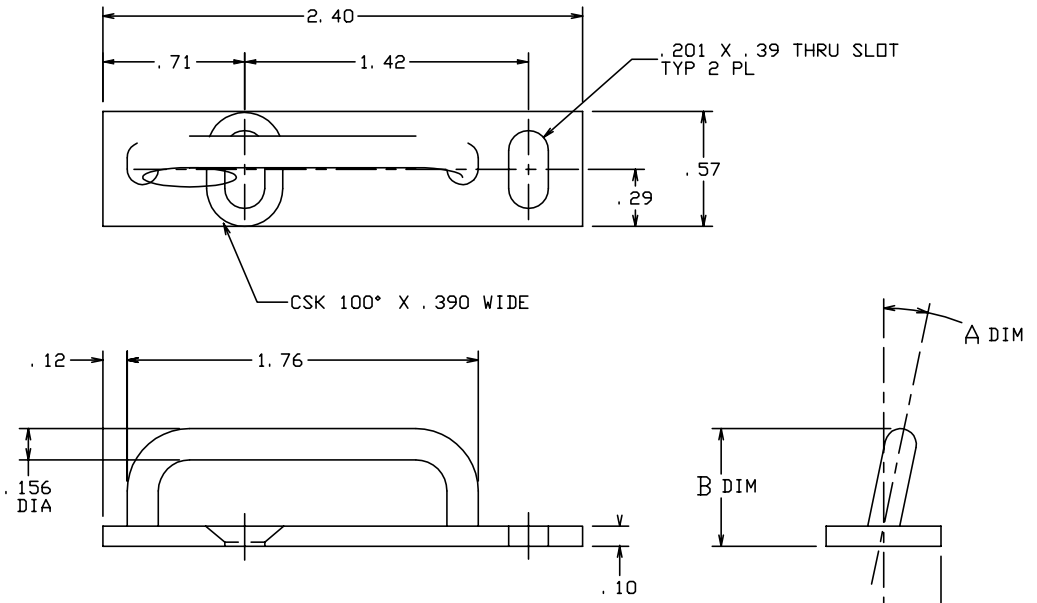

-1, -3, -5 STRIKER (SHOWN)
-2, -4, -6 STRIKER (OPP.)

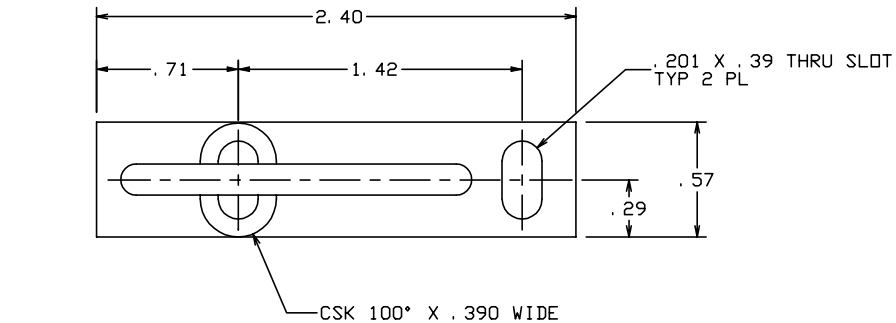

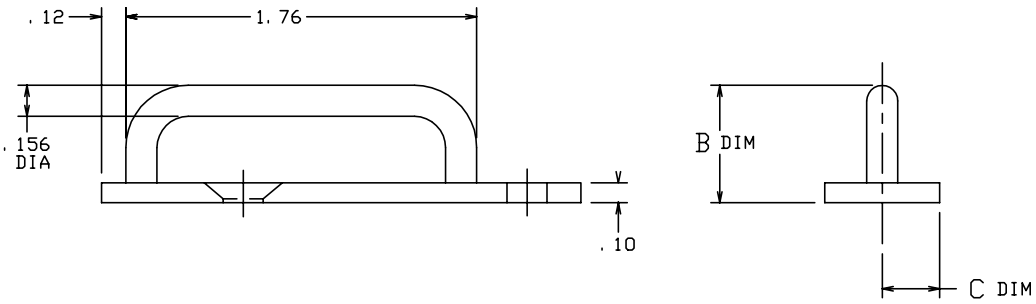

-7 STRIKER

C DIM	B DIM	A DIM	PART NO.	DESCRIPTION
.290	.588	–	-7	STRIKER
.200	.588	17°35′	-6	STRIKER
.200	.588	17°35′	-5	STRIKER
.200	.748	8°30′	-4	STRIKER
.200	.748	8°30′	-3	STRIKER
.200	.588	11°45′	-2	STRIKER
.200	.588	11°45′	-1	STRIKER

PARTS LIST

UNLESS OHERWISE SPECIFIED
DIMENSIONS ARE IN INCHES
TOLERANCES ON
DECIMALS .X ± .1, .XX ± .03, .XXX ± .020 ANGLES ± 0° 30′ DRILLED HOLES AND 10387

DO NOT SCALE THIS DRAWING

MATERIAL - FINISH

NEXT ASSY

FINAL ASSY

DRAWN BY T. CSIK 5-12-97
CHECKED
ENGINEER
PROJECT
APPROVAL
APPROVAL
USED ON

SKYLOCK INDUSTRIES INCORPORATED
MONROVIA CALIFORNIA U.S.A.

STRIKER

SIZE	CODE IDENT. NO.	DRAWING NO.	REV.
C	51941	20432	A

SCALE 1:1 WT. SHEET 1 OF 1